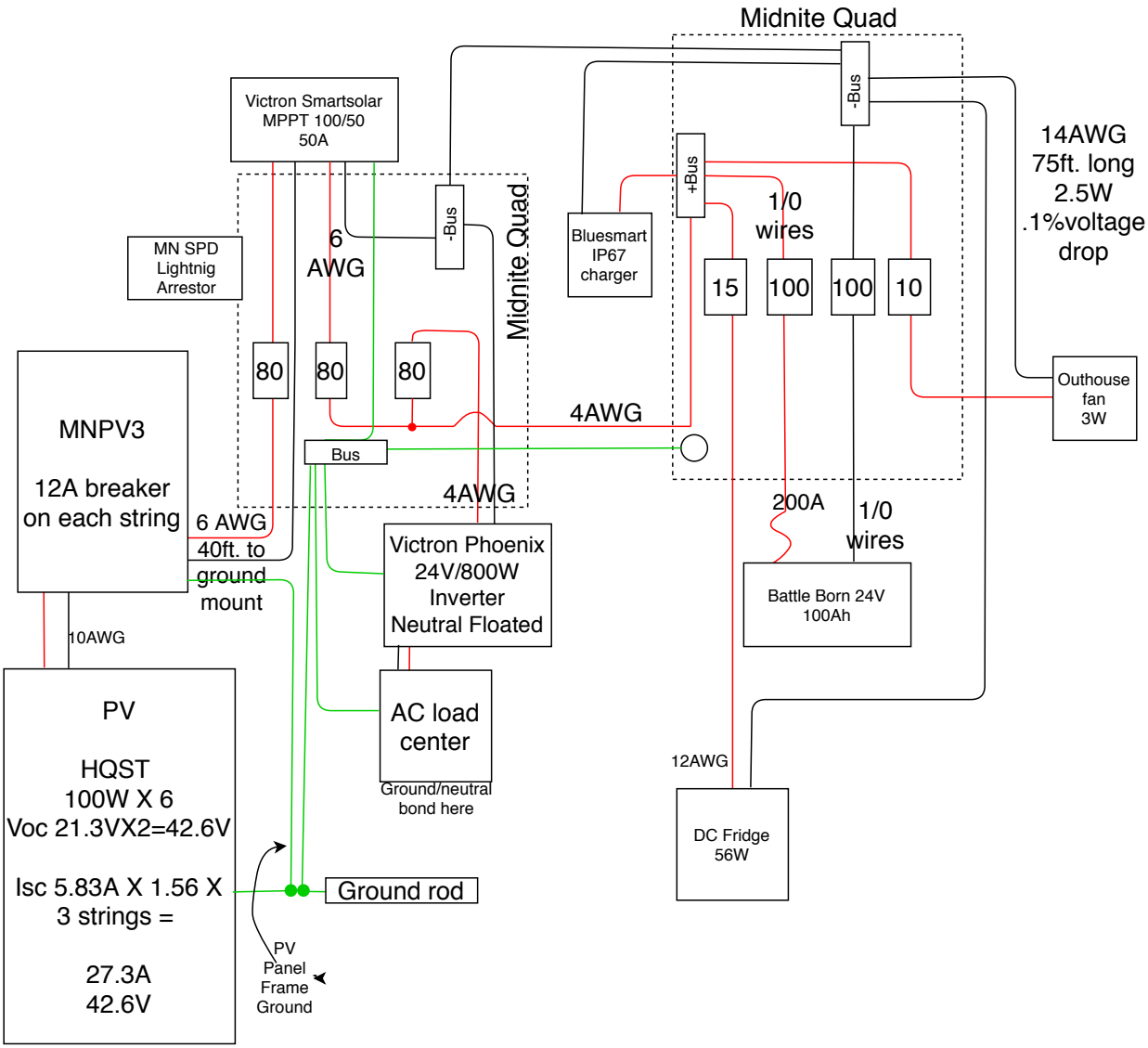
Midnite Quad
-Bus
+Bus
Victron Smartsolar
MPPT 100/50
50A
14AWG
75ft. long
2.5W
.1%voltage
drop
1/0
wires
Bluesmart
IP67
charger
MN SPD
Lightnig
Arrestor
6
AWG
-Bus
Midnite Quad
15
100
100
10
80
80
80
Outhouse
fan
3W
MNPV3
12A breaker
on each string
4AWG
Bus
4AWG
200A
1/0
wires
6 AWG
40ft. to
ground
mount
Victron Phoenix
24V/800W
Inverter
Neutral Floated
Battle Born 24V
100Ah
10AWG
PV
HQST
100W X 6
Voc 21.3VX2=42.6V
Isc 5.83A X 1.56 X
3 strings =
27.3A
42.6V
AC load
center
Ground/neutral
bond here
12AWG
DC Fridge
56W
Ground rod
PV
Panel
Frame
Ground