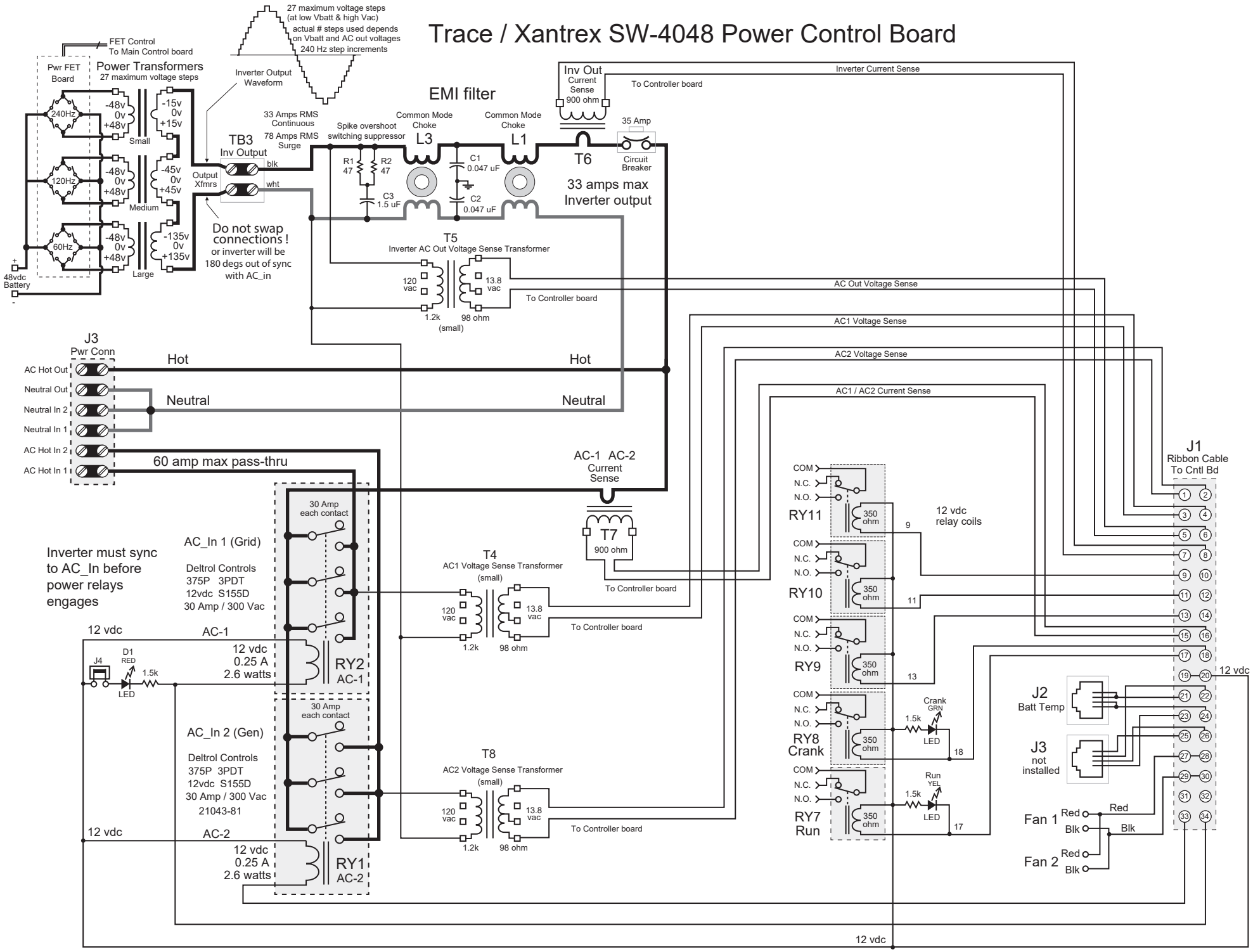Trace / Xantrex SW-4048 Power Control Board