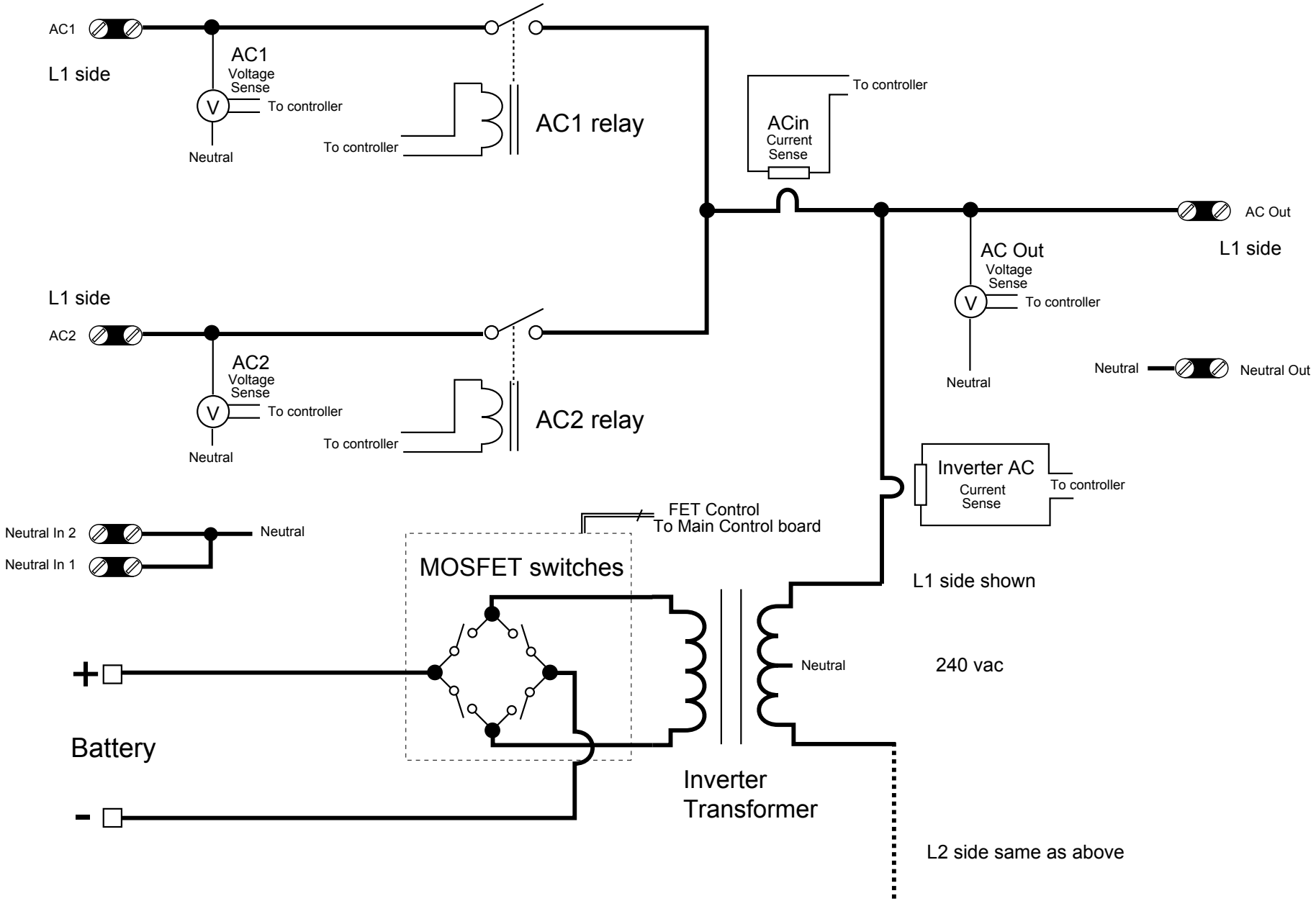
AC1
L1 side
AC1
Voltage
Sense
V
To controller
Neutral
To controller
AC1 relay
To controller
ACin
Current
Sense
AC Out
L1 side
AC Out
Voltage
Sense
V
To controller
Neutral
Neutral
Neutral Out
L1 side
AC2
V
AC2
Voltage
Sense
To controller
Neutral
To controller
AC2 relay
Inverter AC
Current
Sense
To controller
Neutral In 2
Neutral In 1
Neutral
FET Control
To Main Control board
MOSFET switches
L1 side shown
+
Neutral
240 vac
Battery
-
Inverter
Transformer
L2 side same as above