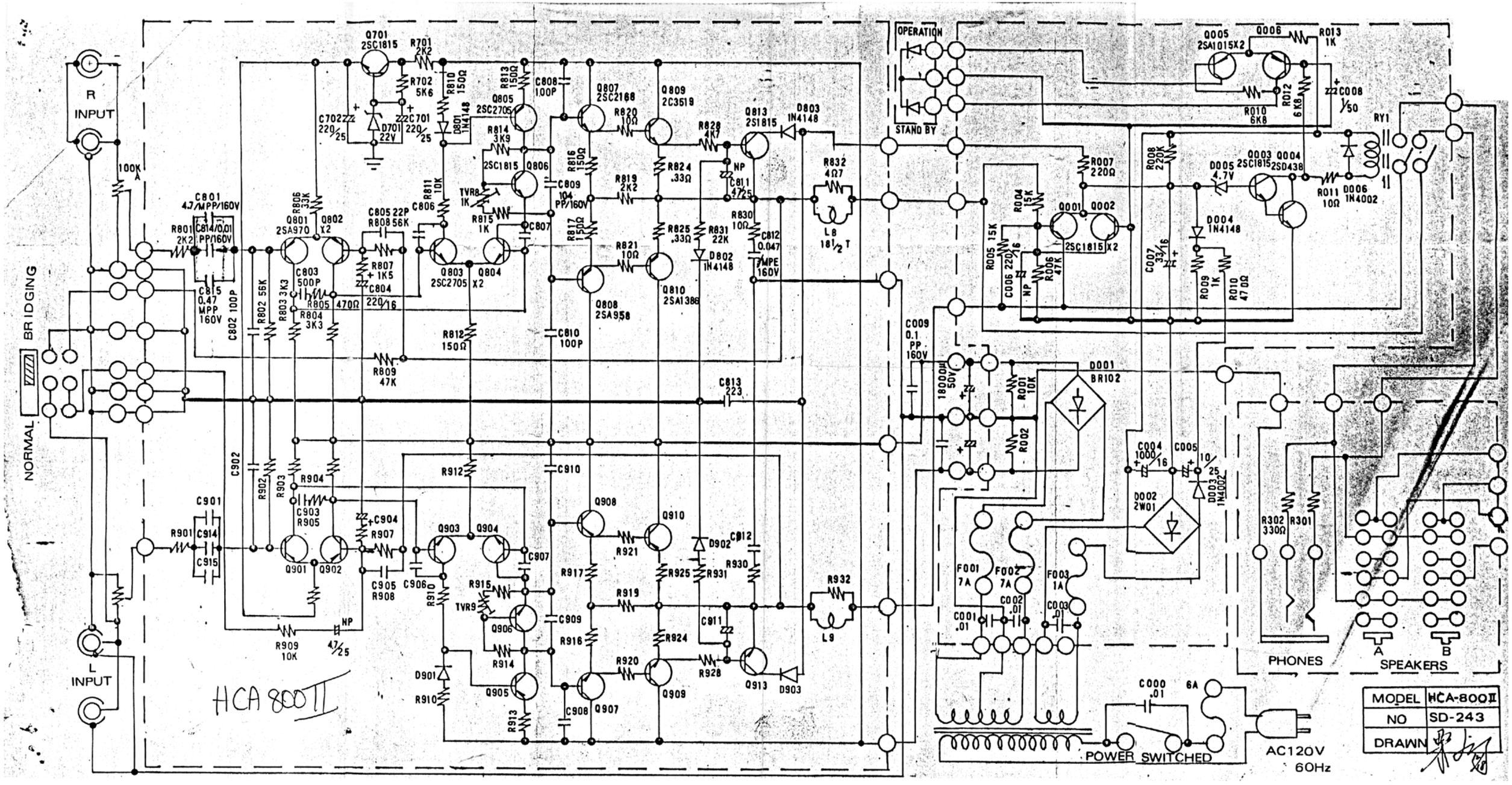
R INPUT
L INPUT
NORMAL
BRIDGING
OPERATION
STAND BY
Q701 2SC1815
R701 2K2
R702 5K6
C702 220/25
C701 220/25
D701 22V
R810 150Ω
D801 1N4148
R813 150Ω
C808 100P
Q805 2SC2705
R814 3K9
2SC1815 Q806
TVR8 1K
R815 1K
C807
R816 150Ω
C809 104 PP/160V
Q807 2SC2168
R820 10Ω
R819 2K2
R817 150Ω
R821 10Ω
Q808 2SA958
C810 100P
Q809 2C3519
R828 4K7
R824 .33Ω
R825 .33Ω
R831 22K
D802 1N4148
Q810 2SA1386
Q813 2S1815
D803 1N4148
NP C811 4725
R830 10Ω
C812 0.047 MPE 160V
R832 4Ω7
LB 18½T
C801 4.7/MPP/160V
R801 2K2
C814/0.01 PP/160V
C815 0.47 MPP 160V
C802 100P
R802 56K
R803 3K3
Q801 2SA970
C803 500P
R805 470Ω
R804 3K3
Q802 X2
C805 22P
R808 56K
R807 1K5
C804 220/16
R806 33K
R811 10K
C806
Q803 2SC2705
Q804 X2
R812 150Ω
R809 47K
C813 223
C902
R902
R903
R904
C903 R905
Q901
Q902
C901
R901
C914
C915
C904
R907
C905 R908
C906
R909 10K
NP 47/25
R910
D901
R910
Q903
Q904
C907
R915
TVR9
Q906
R914
Q905
R913
C908
R912
C910
Q908
R921
R917
R919
C909
R916
R920
Q907
Q910
D902
C912
R925
R931
R930
R924
C911
R928
Q909
Q913
D903
R932
L9
C009 0.1 PP 160V
18000μ 50V
R001 10K
R002
D001 BR102
C004 1000/16
C005 10/25
D003 1N4002
D002 2W01
F001 7A
F002 7A
F003 1A
C001 .01
C002 .01
C003 .01
C000 .01
6A
POWER SWITCHED
AC120V 60Hz
Q005 2SA1015X2
Q006
R013 1K
R012 6K8
R010 6K8
C008 1/50
RY1
R007 220Ω
R008 220K
R005 15K
R004 15K
Q001
Q002
2SC1815X2
R006 47K
C006 220/16
NP
C007 33/16
D005 4.7V
Q003 2SC1815
Q004 2SD438
R011 10Ω
D006 1N4002
D004 1N4148
R009 1K
R010 47Ω
R302 330Ω
R301
PHONES
A
B
SPEAKERS
HCA 800II
MODEL HCA-800II
NO SD-243
DRAWN