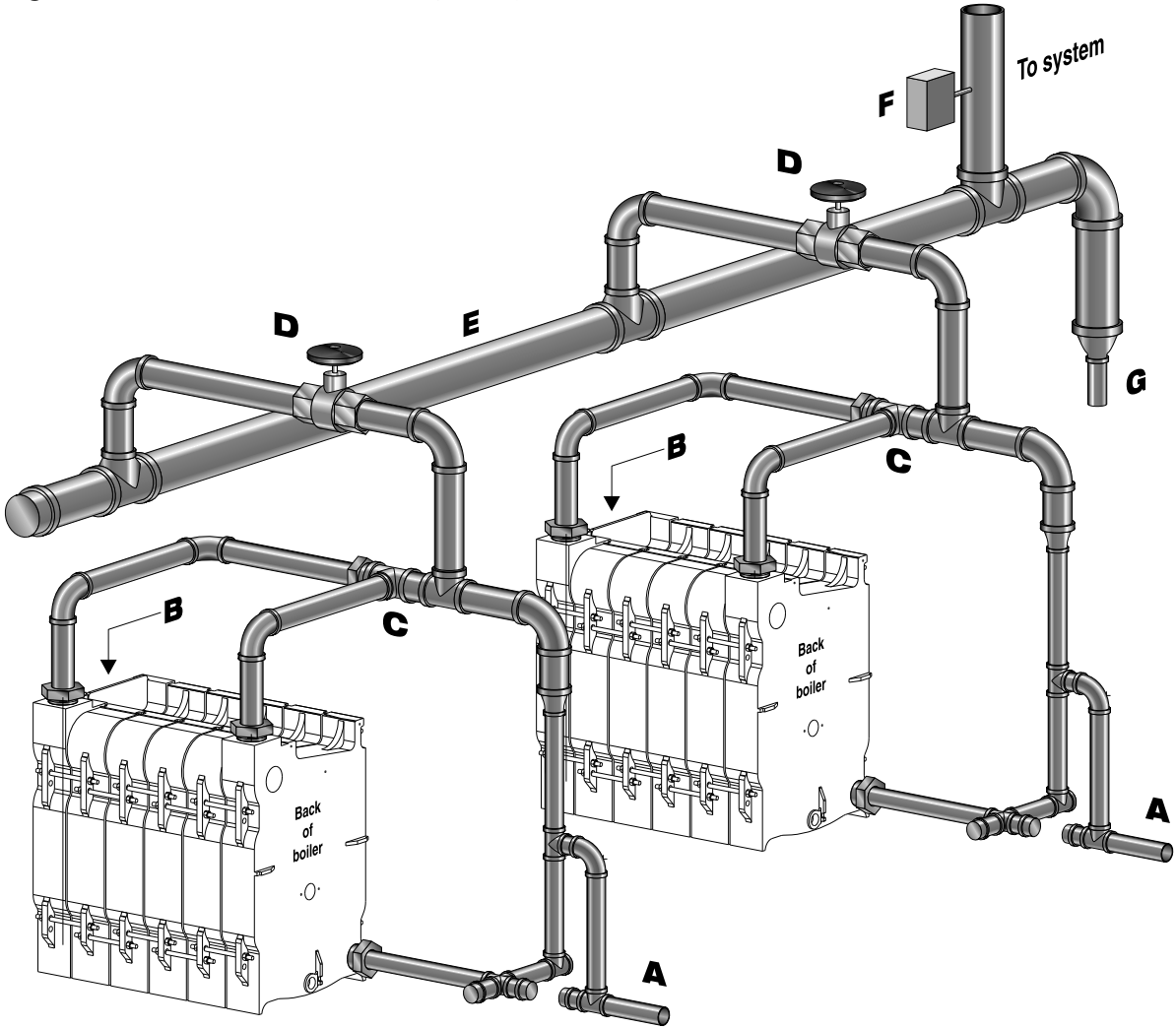
To system
F
D
D
E
G
B
C
B
C
Back of boiler
Back of boiler
A
A