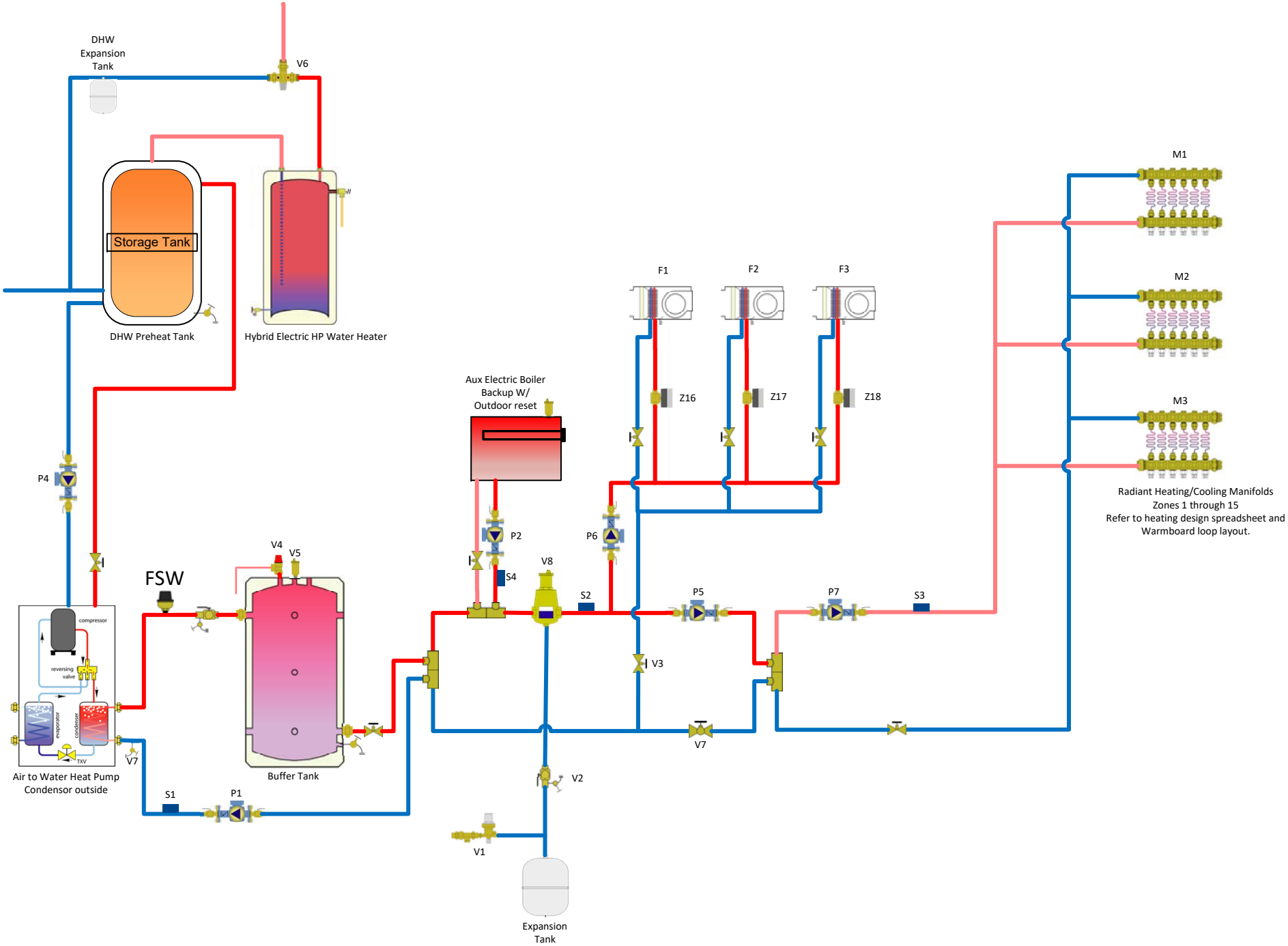
DHW
Expansion
Tank
V6
Storage Tank
DHW Preheat Tank
Hybrid Electric HP Water Heater
M1
M2
M3
F1
F2
F3
Z16
Z17
Z18
Aux Electric Boiler
Backup W/
Outdoor reset
P4
P2
P6
S4
V8
S2
P5
P7
S3
V4
V5
FSW
V3
V7
Air to Water Heat Pump
Condensor outside
Buffer Tank
S1
P1
V2
V1
Expansion
Tank
Radiant Heating/Cooling Manifolds
Zones 1 through 15
Refer to heating design spreadsheet and
Warmboard loop layout.

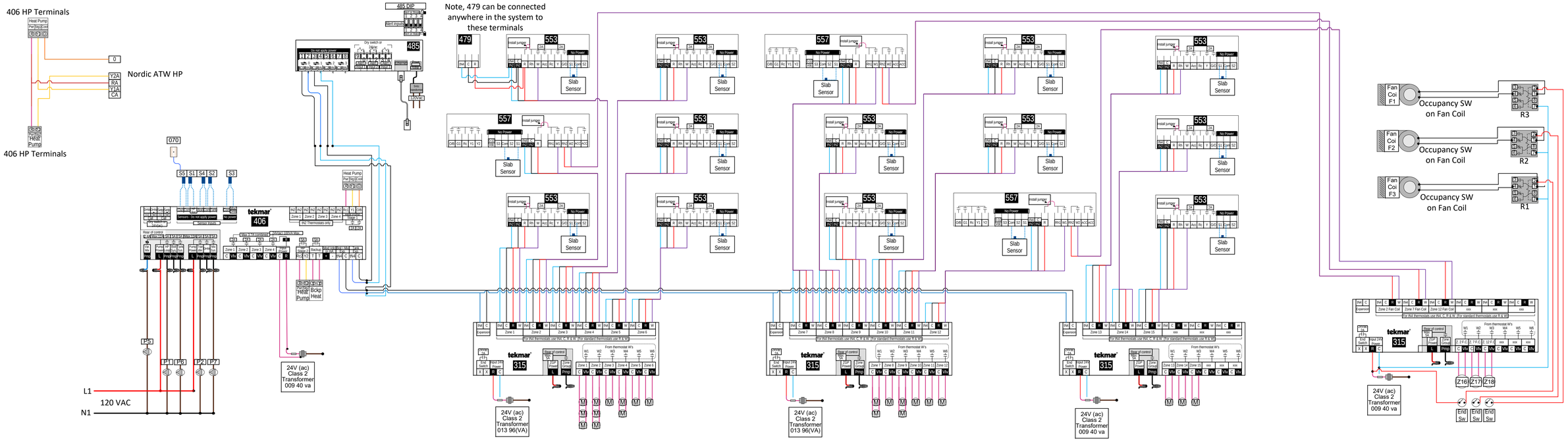
406 HP Terminals
Nordic ATW HP
406 HP Terminals
485 DIP
Note, 479 can be connected anywhere in the system to these terminals
479
553
557
Slab Sensor
Occupancy SW on Fan Coil
R3
R2
R1
tekmar 406
tekmar 315
24V (ac) Class 2 Transformer 009 40 va
24V (ac) Class 2 Transformer 013 96(VA)
L1
120 VAC
N1