M. C. HONEYWELL.

AUTOMATIC THERMOSTAT CONTROL.

APPLICATION FILED FEB. 16, 1914.

1,171,955. Patented Feb. 15, 1916.

2 SHEETS—SHEET 1.

Fig. 1.

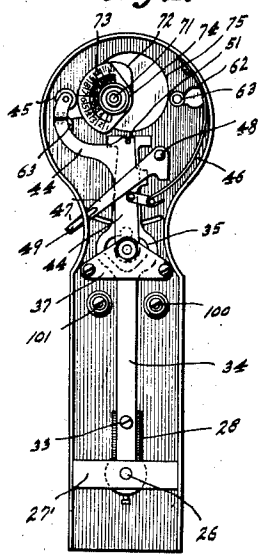

Fig. 2.

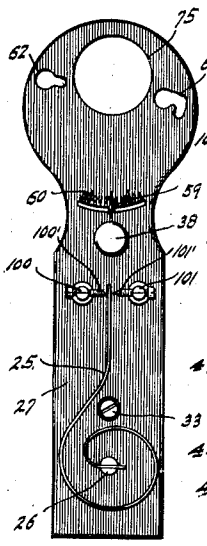

Fig. 3.

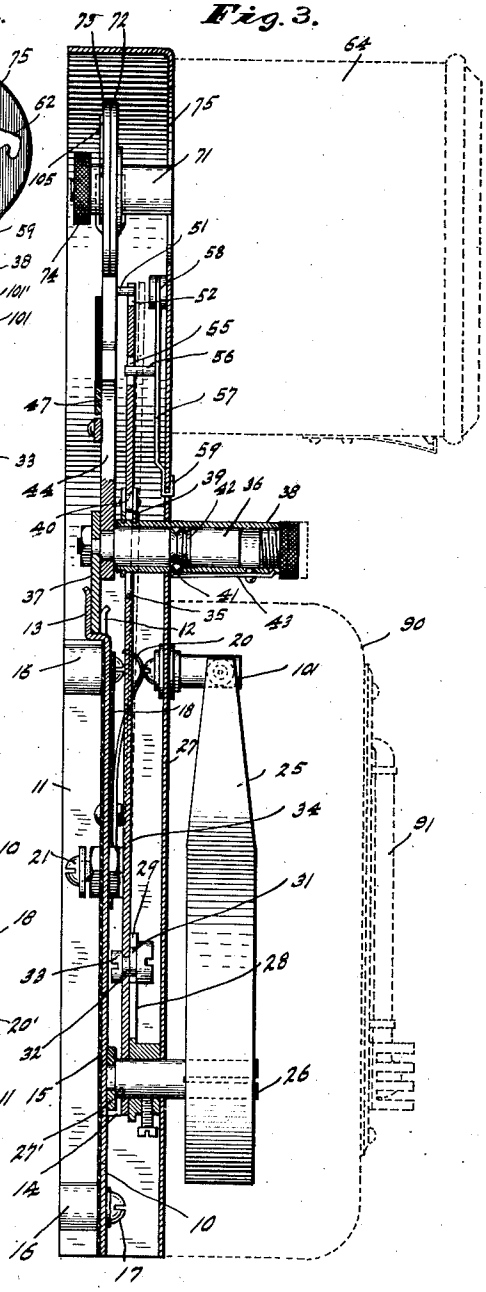

Fig. 4.

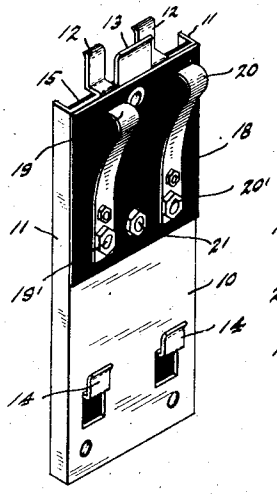

Fig. 5.

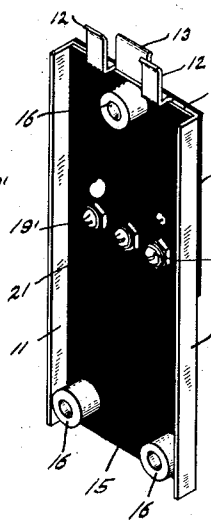

WITNESSES:

Frank A. Fahle

Josephine Gasper

INVENTOR

Mark C. Honeywell,

BY

Arthur M. Hood

ATTORNEY

M. C. HONEYWELL.

AUTOMATIC THERMOSTAT CONTROL.

APPLICATION FILED FEB. 16, 1914.

1,171,955.

Patented Feb. 15, 1916.

2 SHEETS—SHEET 2.

Fig. 6.

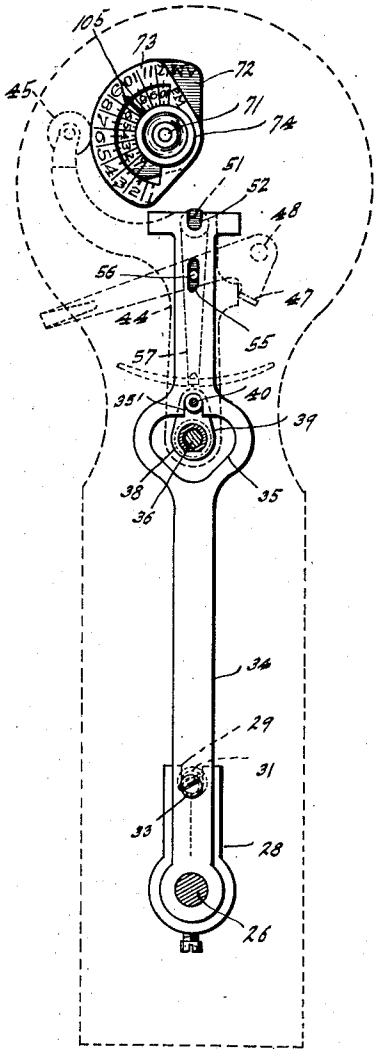

Fig. 7.

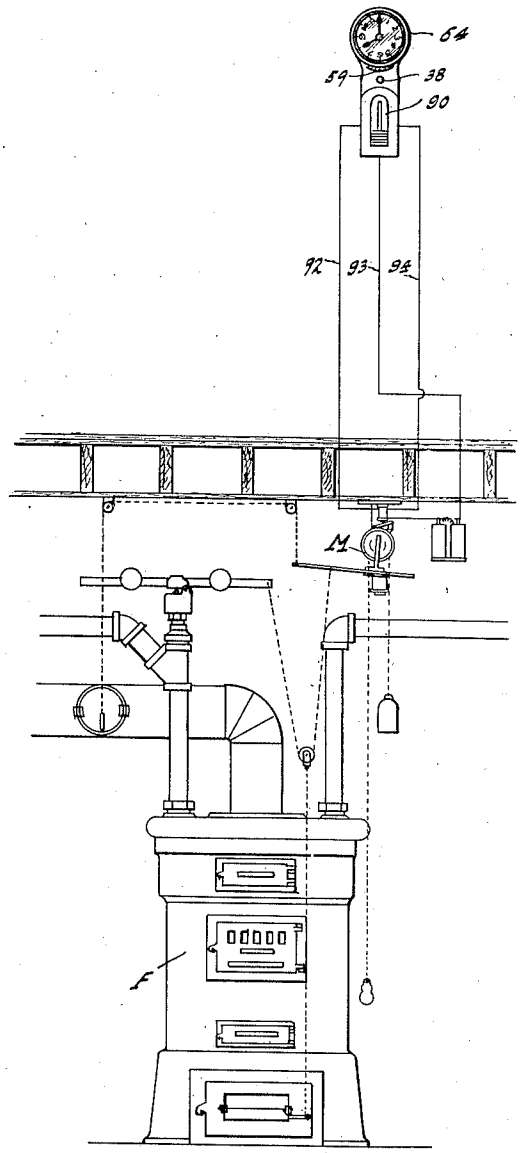

WITNESSES:

Frank A. Fahle

Josephine Gasper

INVENTOR

Mark C. Honeywell,

BY

Arthur M. Hood

ATTORNEY

UNITED STATES PATENT OFFICE.

MARK C. HONEYWELL, OF WABASH, INDIANA, ASSIGNOR TO HONEYWELL HEATING SPECIALTY COMPANY, OF WABASH, INDIANA, A CORPORATION OF INDIANA.

AUTOMATIC THERMOSTAT CONTROL.

1,171,955. Specification of Letters Patent. Patented Feb. 15, 1916.

Application filed February 16, 1914. Serial No. 818,899.

To all whom it may concern:

Be it known that I, MARK C. HONEYWELL, a citizen of the United States, residing at Wabash, in the county of Wabash and State of Indiana, have invented a new and useful Automatic Thermostat Control, of which the following is a specification.

The object of my invention is the production of an efficient and easily manipulable and adjustable time controlled thermostat especially designed for the control of a furnace-damper motor (though not limited to that use) by means of which the mean of the thermostatic element relative to its coöperative terminal may be automatically alternately shifted at desired periods, arrangements being also made to separate the thermostatic element from control of the time train so as to permit manual manipulation.

A further object of my invention is to produce such improvements in details of construction as will facilitate the proper installation and adjustment of the various parts.

The accompanying drawings illustrate my invention.

Figure 1 is a rear elevation of the thermostat-carrying and shifting elements; Fig. 2 a front elevation with the time-train removed; Fig. 3 a vertical section, at right angles to the planes of Figs. 1 and 2, on a larger scale about full size in the original drawing; Fig. 4 a face perspective of the separate terminal plate; Fig. 5 a back perspective of the terminal plate; Fig. 6 a view similar to Fig. 1 (on a larger scale) with the primary shifting lever omitted; Fig. 7 a diagram showing the installation of the apparatus in conjunction with a furnace and damper operating motor.

In the drawings, 10 indicates a terminal-carrying plate having side flanges 11, 11. Plate 10 carries three retaining fingers 12, 12 and 13 at its upper end, and two fingers 14, 14 near the lower end, all of said fingers being pointed in the same direction. Arranged to cover plate 10 between flanges 11, is an insulating sheet 15 and perforated spaces 16 are provided for the reception of fastening screws 17 and the proper support of plate 10. Plate 10 also carries on its outer face an insulation sheet 18 upon which are mounted two spring terminals 19 and 20, the fastening screws 19′ and 20′ therefore passing through the two sheets 15 and 18 and being accessible between flanges 11. Arranged between the two terminal screws 19′ and 20′ is a third terminal 21.

The structure just described is designed for attachment to a vertical surface with the fingers and spring terminals presented upwardly for the convenient reception of the apparatus now to be described.

The thermostatic element 25—of any desired form—is, in the drawings, shown as a common element having a volute, the inner end of which is carried by the supporting and adjusting post 26 journaled in the main body 27 and cross-bar 27′. This main body 27 is conveniently formed of sheet metal with side flanges to form an open-backed casing within which many of the necessary parts of the apparatus may be mounted and hidden.

Attached to post 26 is an arm 28 provided with a slot 29 within which is arranged an eccentric 31 carried by a pin 32 having transversely slotted heads 33, 33, by means of which the eccentric may be shifted. Pin 32 is journaled in a primary operating lever 34 which is journaled on post 26. Near its upper end lever 34 is perforated at 35 to permit the passage therethrough of a post 36 which is journaled in a cross bar 37 carried by body 27.

Sleeved upon post 36 is tube 38 which is journaled in body 27 and projected forwardly therethrough so as to be manually accessible. Tube 38 carries a radially projecting arm 39 provided with a pin 40 or other suitable portion to take into a lateral extension 35′ of the perforation 35, and the arm 39 is so formed adjacent pin 40 (conveniently by two parallel plates) as to overlie the lever 34 and thus be capable of springing the free end of said lever laterally; as indicated in dotted lines in Fig. 3. Tube 38 is axially shiftable on post 36 and is held in either of its extreme positions by a small ball 41 lying in a suitable perforation in the tube and urged inwardly into one or another of the circumferential grooves 42 of post 36, by a light spring 43.

Attached to post 36 is a lever 44 which is extended alongside lever 34 and provided at its upper end with a roller 45. Attached to lever 44, so as to normally urge it in one direction, is a spring 46 and arranged in the path of movement of the lever caused by

said spring, is a stop arm 47 pivoted at 48 and projected at 49 through body 27 so as to be manually adjustable to vary the limit to which lever 44 may be drawn by the spring 46. Lever 44 is provided with a pin 51 which, when the free end of lever 34 is in its normal plane, projects into a slot 52 in lever 34, there connecting the two levers for simultaneous swinging movement, the pin being of such length that deflection of the free end of the lever 34 will carry said lever beyond the influence of the pin. Adjacent slot 52 the lever 34 is laterally expanded an amount at least equal to the possible angular movement of this lever relative to lever 44 so that, when lever 34 has been withdrawn from pin 51, there will be no possibility of said pin getting to one side or the other of lever 44. Lever 34, at an intermediate point, is provided with a slot 55 which receives a pin 56 carried by an arm 57 pivoted at 58 and having an indicator finger 59 projected through body 27 and traversing an indicator scale 60.

The main body, or carrier, 27 is provided, near its upper end, with a pair of bayonet-slots 62, 62 adapted to receive pins 63, 63 carried by a time-train-casing 64, which may very conveniently be an eight-day movement. The time train carries an arbor 71 so connected as to make one complete rotation in a desired period of repetition, commonly twenty-four hours. Journaled upon arbor 71 are two cams 72 and 73 having maximum and minimum portions of equal throw and these cams may be clamped upon the arbor in any desired angular relationship by means of the clamping nut 74. Cams 72 and 73 pass through an opening 75 and lie in the plane of swing of roller 45 said roller being held in constant engagement with both cams by spring 46, unless prevented by stop 47. Carried by body 27 but insulated therefrom are terminal posts 100 and 101 which are arranged upon opposite sides of the free end of the thermostatic element 25 and provided in the usual manner with laterally adjustable terminal points 100′ and 101′ between which the free end of the thermostatic element 25 plays.

The apparatus thus described is intended for use in the manner illustrated in Fig. 7, said arrangement being the common one wherein a thermostatic element is arranged in the controlling circuit of a damper regulating motor M and the details of this arrangement form no part of my present invention.

In order to protect the thermostatic element a cover 90 carrying a thermometer 91 in a common manner is provided for attachment to the body 27. In erection, the wires 92, 93, and 94 of the controlling circuit will be attached to the terminals 20′, 21 and 19′, respectively, of plate 10 and said plate will then be attached to a suitable vertical surface as, for instance, a door casing, the fingers 12, 12, 13 and 14, 14 being upwardly presented. The body 27 may then be readily attached to this permanent support by bringing bar 37 into the plane between fingers 12, 12 and finger 13 and bringing bar 27′ against plate 10 immediately above fingers 14, whereupon the body 27 may be moved downwardly to bring the parts to the position shown in Fig. 3, thus firmly supporting the body 27 upon the plate 10 and this movement brings the inner ends of the terminal posts 100 and 101 into engagement with the spring terminals 19 and 20. The user will then detach time train 64 from body 27 by a slight rotation and lateral displacement and forward withdrawal, whereupon the time train may be wound and, by loosening the clamping nut 74, the two cams 72 and 73 may be adjusted relative to the pointer 105, the p. m. cam 73 having a proper portion brought beside the pointer 105 to indicate the time in the evening when there is to be a mechanical shifting of the thermostatic element, and the a. m. cam 72 being likewise shifted relative to pointer 105 to indicate the time in the morning when there is to be a return of the thermostatic element to its normal position. The parts being in the positions indicated in full lines in Fig. 3 the operation will be as follows: Arbor 71 by its rotation will shift the cams 72 and 73 beneath roller 45 and, in due course, the low side of the combination cam will come opposite the roller and thus permit lever 44 to shift (to the right in Fig. 6) and thus, through pin 51 and slot 52, shift lever 34 and thus shift the free end of the thermostatic element relative to the terminals 100 and 101 and, because of this shifting, the free end of the thermostatic element will remain away from the terminal 100 at a lower temperature than when the parts are in the position shown in Fig. 1 and consequently the normal or controlling temperature of the apparatus during the period when the roller 45 is in engagement with the low side of the cams, will be lower than the normal controlling temperature of the apparatus when the roller 45 is engaged by the higher sides of the cams. As a consequence the draft dampers of the furnace F will remain in fire checking condition at a lower room temperature. At the designated time in the morning the arbor 71 will have rotated sufficiently to bring the high side of cam 72 beneath roller 45 thus shifting the parts back to normal position and, by so doing, bringing the free end of the thermostatic element 25 into contact with the terminal 100 thus, in a well known manner, causing the motor M to operate to shift the furnace dampers into fire accelerating position.

At times the occupants of the house where

this apparatus is installed may desire to manually manipulate the apparatus and it is for this purpose that the sleeve 38 and the connections are provided. By pulling sleeve 38 outwardly to the position shown in dotted lines in Fig. 3, the connection 51—52 between lever 44 and lever 34 is separated, whereupon, irrespective of the time train, the free end of the thermostatic element may be adjusted to any desired extent relative to the terminals 100′ and 101′.

I claim as my invention:

1. In a time controlled thermostat, the combination of a thermostatic member, a shiftable carrier, an arm carried by said carrier and displaceable from its normal plane of movement in one portion, a lever, a driving connection between said lever and said arm in the displaceable portion thereof, a time train, a cam carried by said time train and operating upon said lever, and a manually manipulative member connected with said arm whereby its displaceable portion may be displaced and the said arm shifted independent of the lever.

2. In a time controlled thermostat, the combination of a thermostatic member, a shiftable carrier, an arm carried by said carrier and displaceable from its normal plane of movement in one portion, a lever, a driving connection between said lever and said arm in the displaceable portion thereof, a time train, and a cam carried by said time train and operating upon said lever.

3. In a time controlled thermostat, the combination of a thermostatic element, a rotatable carrier, an arm carried by said carrier and at its free end displaceable from its normal plane of movement, a lever arranged adjacent said arm, a separable connection between said lever and the free end of the arm, a time train, a cam carried by said time train and operating upon said lever, and a manually manipulative member connected with said arm to displace its free end and operate the same independent of the lever.

4. In a time controlled thermostat, the combination of a thermostatic element, a rotatable carrier, an arm carried by said carrier and at its free end displaceable from its normal plane of movement, a lever arranged adjacent said arm, a separable connection between said lever and the free end of the arm, a time train, and a cam carried by said time train and operating upon said lever.

5. In a time controlled thermostat, the combination of a thermostatic element, a rotatable carrier, an arm carried by said carrier and at its free end displaceable from its normal plane of movement, a lever arranged adjacent said arm, a separable connection between said lever and the free end of the arm, a time train, a cam carried by said time train and operating upon said lever, a pin arranged substantially at right angles to the planes of said arm and lever, a manually manipulative sleeve mounted upon said pin and shiftable axially and rotatively upon said pin, and a connection between said sleeve and said arm whereby the said arm may be shifted from its normal plane by axial movement of the sleeve and may be shifted laterally by rotative movement of the sleeve.

6. In a time controlled thermostat, the combination of a thermostatic element, a shiftable carrier, an arm carried by said carrier and shiftable at its free end from its normal plane of movement, a lever arranged adjacent and substantially parallel with said arm, a time controlled train operating upon said lever, and a pin-and-pocket connection between said lever and arm separable by withdrawal of the arm from its normal plane of movement and the pocket member having sufficient lateral extent adjacent the pocket and in the line of independent movement of the pin to extend beyond the possible independent movement of the pin.

7. In a time controlled thermostat, the combination of a time train, a rotatable arbor driven thereby, a pair of cams angularly adjustable upon said arbor and with relation to each other, each of said cams carrying a scale of hours, an indicator carried by the arbor and coöperating with said cam scales, and means for clamping said cams in desired adjustments upon said arbor.

In witness whereof, I, have hereunto set my hand at Indianapolis, Indiana, this eleventh day of February, A. D. one thousand nine hundred and fourteen.

MARK C. HONEYWELL.

Witnesses:
ARTHUR M. HOOD,
FRANK A. FAHLE.