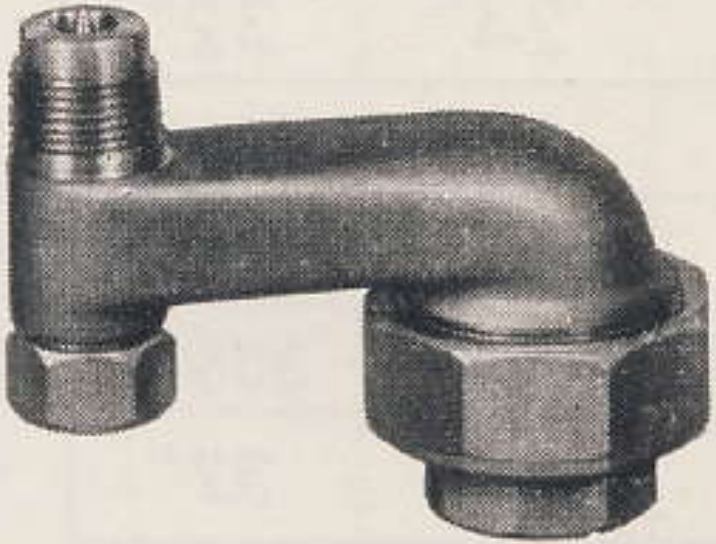

Type 197—Adjustable Regulating Fitting with Female Union Inlet.

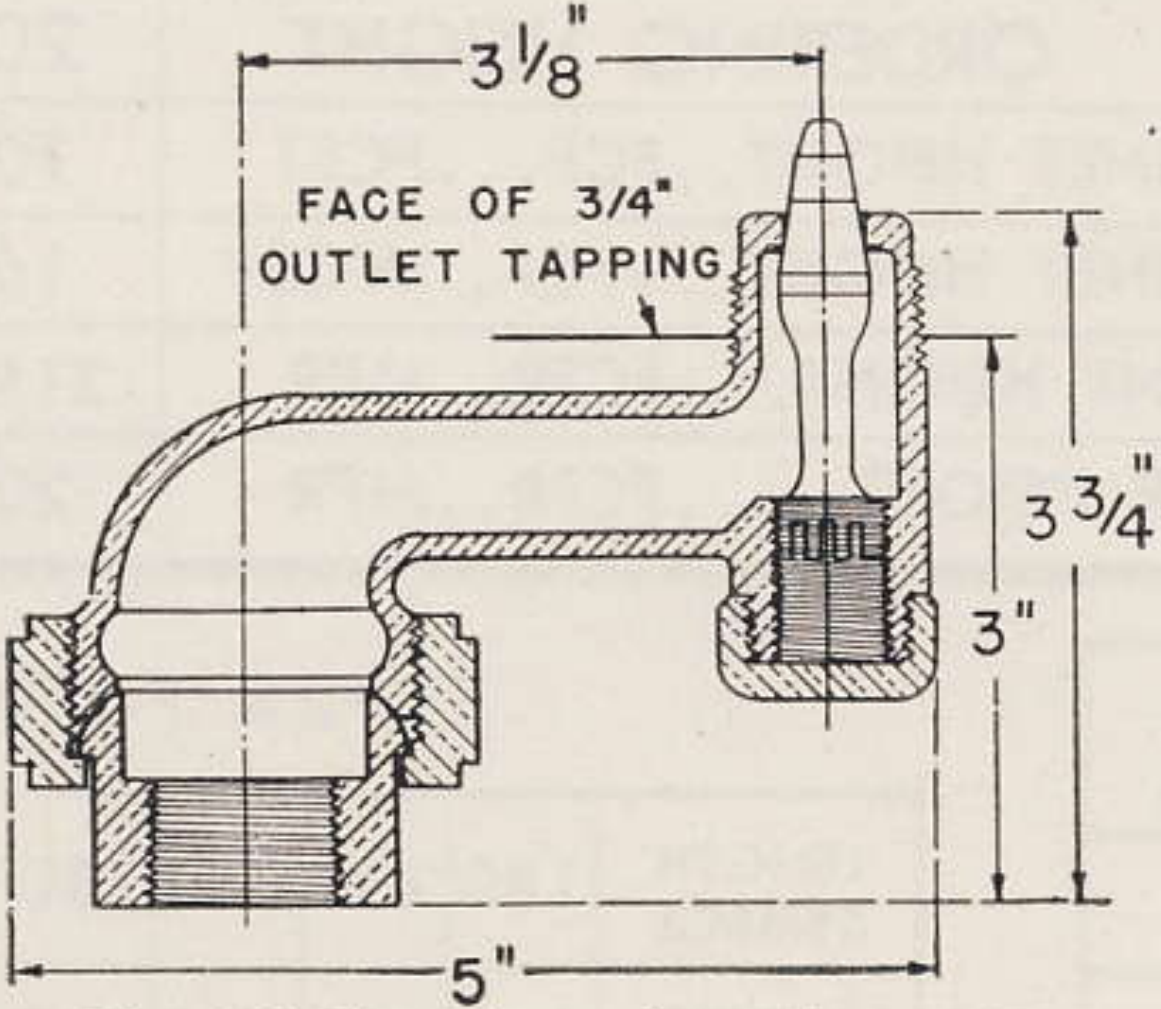

Fig. 1607A—Dimensions Type 197