Schematic Wiring Diagram

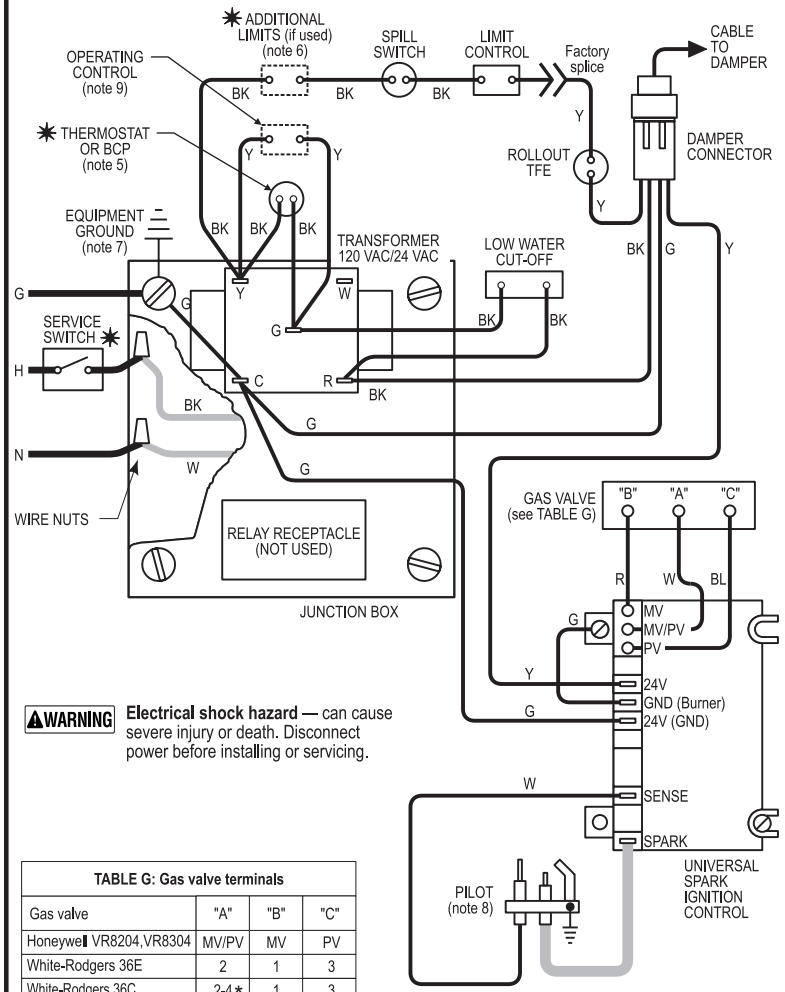

WARNING **Electrical shock hazard** — can cause severe injury or death. Disconnect power before installing or servicing.

TABLE G: Gas valve terminals			
Gas valve	"A"	"B"	"C"
Honeywell VR8204,VR8304	MV/PV	MV	PV
White-Rodgers 36E	2	1	3
White-Rodgers 36C	2-4 *	1	3
Robertshaw 7200	C	M	P
(* Factory jumpered)			

Ladder Wiring Diagram

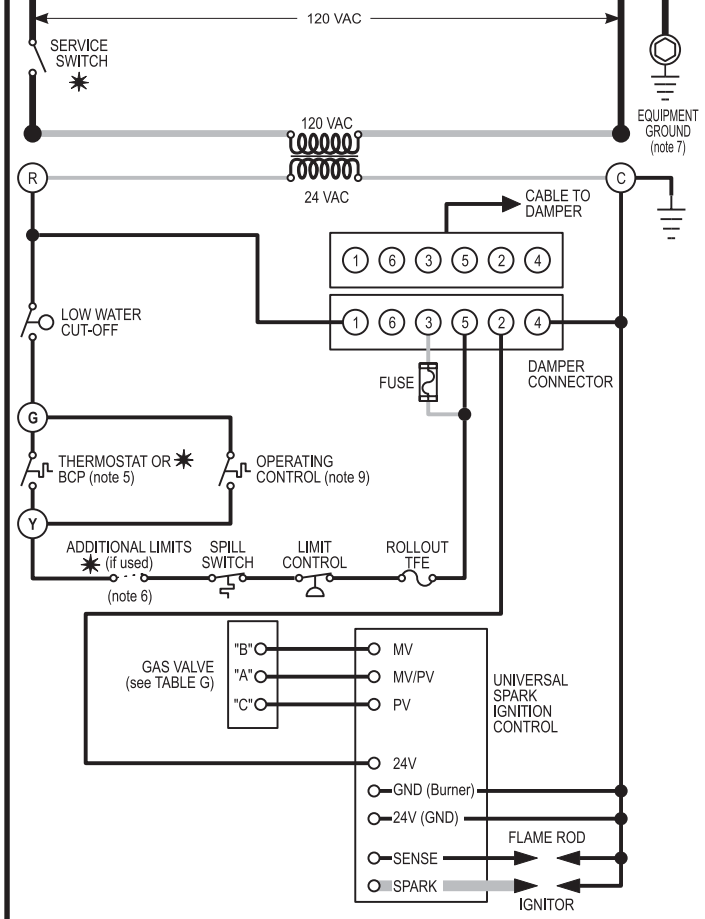

Notes

1. All wiring must be installed in accordance with:
   A. U.S.A. — N.E.C. And any other national, state, or local code requirements.
   B. Canada — C.S.A. C22.1 C.E.C. Part 1 and any other national, provincial, or local code requirements.
2. All contacts shown without power applied (off-shelf condition).
3. If original rollout TFE wire as supplied with the appliance must be replaced, type 200°C wire or its equivalent must be used. If other original wire as supplied with the appliance must be replaced, type 105°C or its equivalent must be used.
4. Refer to control component instructions packed with boiler for application information.
5. Thermostat – Set anticipator to match ampere draw of gas valve plus vent damper and ignition control.
   BCP – For BCP connection in place of thermostat, refer to BCP installation/operation manual.
6. L.W.C.O., additional high limit, etc., wired in series.
7. Denotes field-installed chassis ground.
8. Pilot leadwires are not field replaceable. Replace pilot assembly if necessary.
9. Operating control required with tankless heater.

Legend

- 120 VAC FIELD WIRING
- LOW VOLTAGE FIELD WIRING
- 120 VAC FACTORY WIRING
- LOW VOLTAGE FACTORY WIRING
- IGNITION CABLE
- Items not provided

EG 30 – 75

- Intermittent pilot
- Natural gas
- Steam with or without tankless
- Float-type low water cut-off

WEIL-McLAIN
Weil-McLain • 500 Blaine St. • Michigan City, IN 46360-2388
Part Number 550-223-813/0406