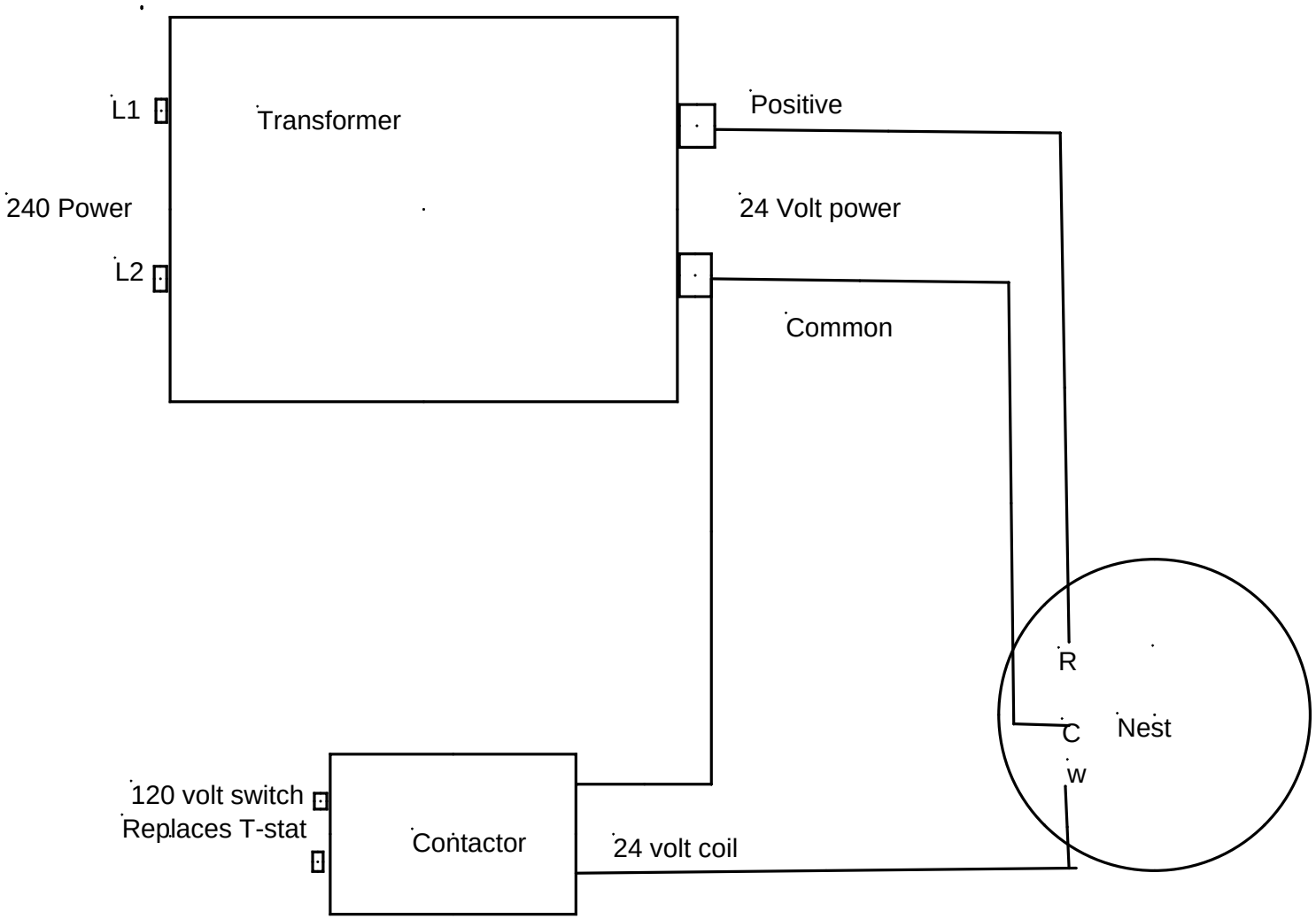
L1
Transformer
Positive
240 Power
24 Volt power
L2
Common
R
C
Nest
w
120 volt switch
Replaces T-stat
Contactor
24 volt coil