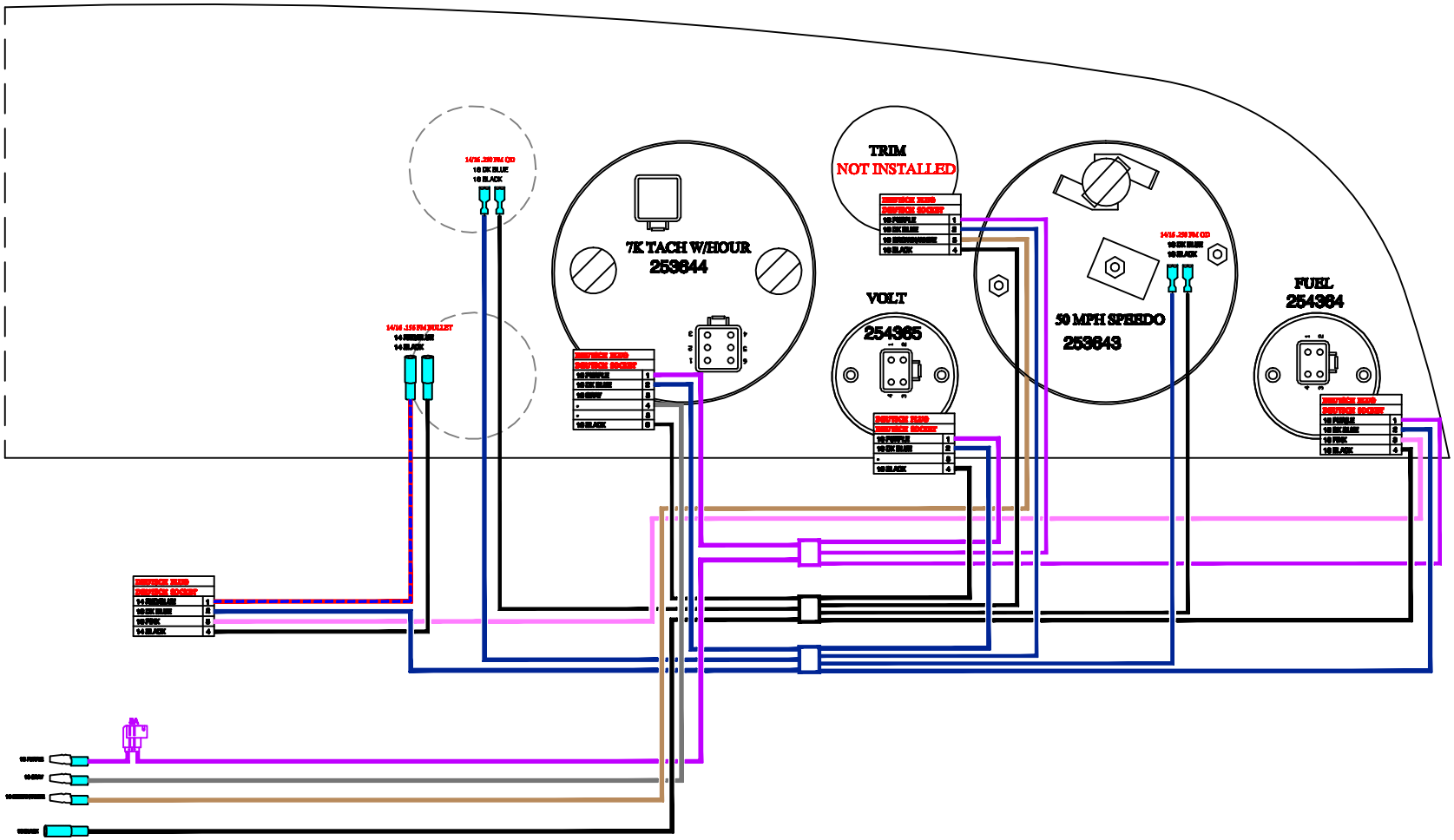

					GODFREY MARINE SYRACUSE, IN	TITLE: ASSY GAUGE 211/231 O/B	SIZE: B
						VISIBLE: YES NO	SCALE: NONE
					DRWN BS 7/28/11	MATERIAL:	
					CKD	BLANK SIZE:	PART NUMBER:
SYM	REVISION DESCRIPTION	BY	DATE	CKD	USED ON: 211/231 O/B 2012		