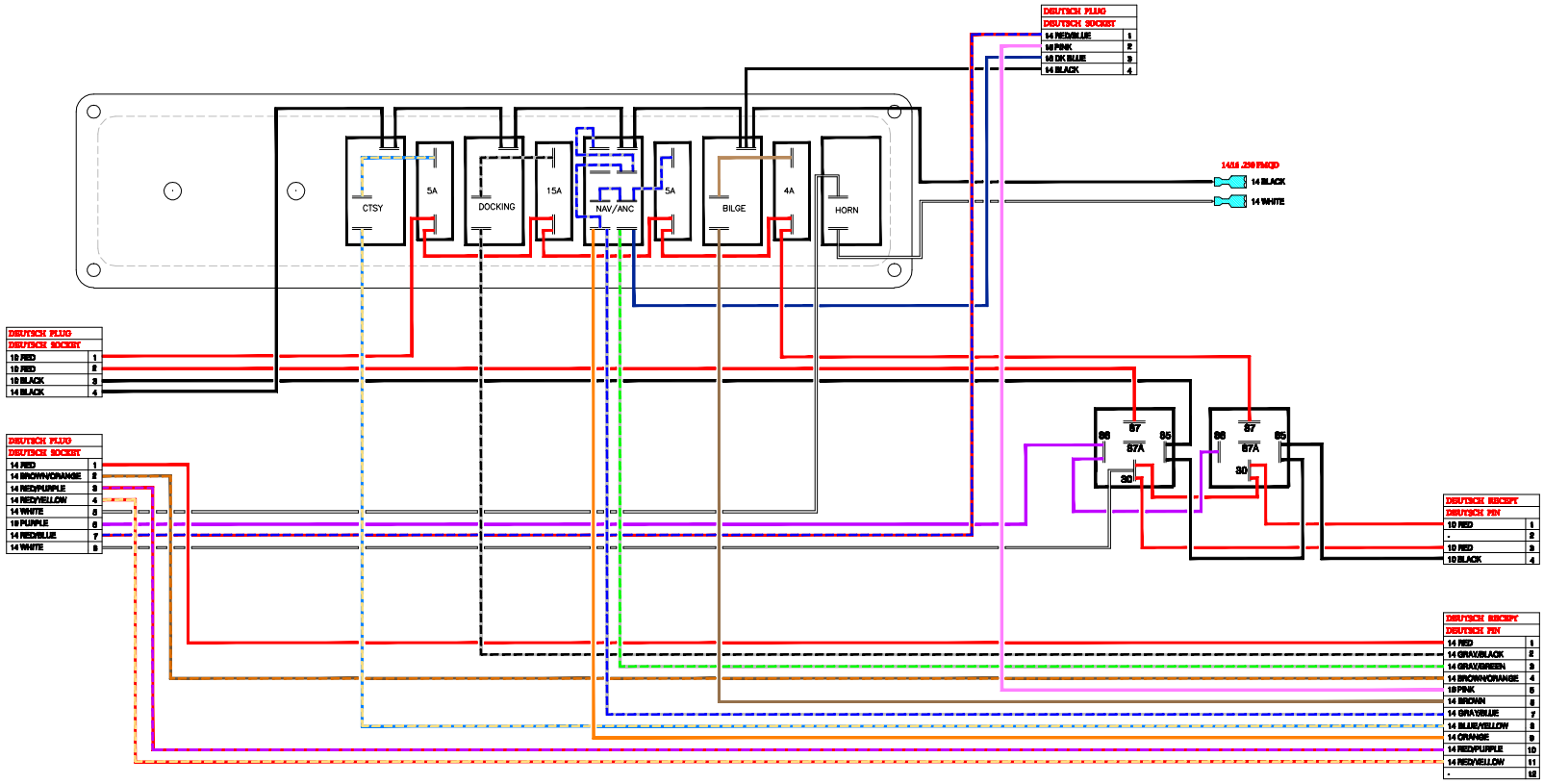


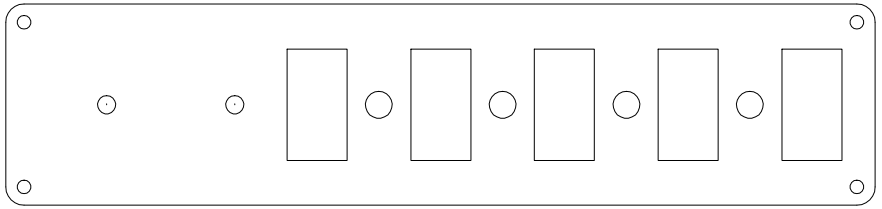

| SYM | REVISION DESCRIPTION | BY | DATE | CKD |
|---|---|---|---|---|

USED ON:

GODFREY MARINE
SYRACUSE, IN

TITLE: PNL STBD SW FD 196/226 O/B

VISIBLE: YES NO

MATERIAL:

SIZE: B

SCALE: NONE

DRWN BGS 6/1/10

CKD

BLANK SIZE:

PART NUMBER: 230809